U-TV0.5XC-3

0.5X C-mount Adaptor



SPECIFICATIONS

Global item code / Local code for USA	N5687400 / U-V105C48
Predecessor product information	None
Product Category	C-Mount Video Camera Port
Magnification (Focal length)	0.5X (-)
Projection Area	ø13.3 mm (In combinations with OFN26.5 Objectives) However, the value may be less than this value depending on combinations with objectives, illuminators, intermediate attachments, etc.
Focal Plane Position	Refer to MAIN DIMENSION
Mounting Method for tube	Circular dovetail (fixing with a tool)
Mounting Method for Video Camera	C-Mount
Parfocality adjustment of imaging device	Adjustment by moving the built-in lens ±0.8 mm (Image Plane)
Centering adjustment	None
Transmittance * reference value	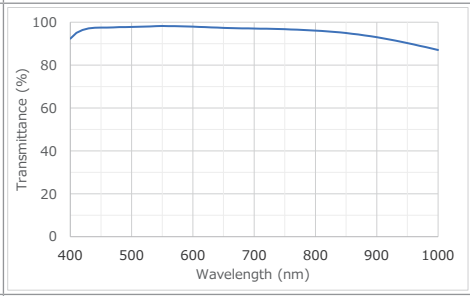
Weight	About 260 g
Country of Origin	China

SYSTEM ENVIRONMENT LIMITATIONS FOR OPERATION

Environment	Indoor use
Temperature T0 [°C]	5 – 40
Humidity RH0 [%]	30 – 85

Provided by Coastal Microscopes

U-TV0.5XC-3

RESTRICTIONS

Optical performance may deteriorate when an objective lens other than UIS2 is combined.
Optical performance may deteriorate depending on the combination with a laser.
Vignetting may occur depending on the length of the intermediate tube.

PACKING LIST

Item	Quantity
Adapter unit	1

MAIN DIMENSION

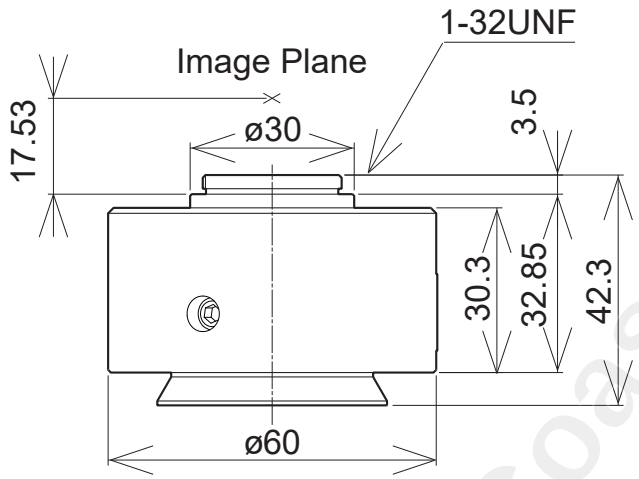

(Unit: mm)

Provided by Coastal Microscopes

· Specifications and appearances are subject to change without any notice or obligation on the part of the manufacturer.

Evident Corporation AM5198 02 Issued in January, 2026

Provided by Coastal Microscopes | coastalmicroscopes.com | sales@coastalmicroscopes.com | (877) 564-2767