Camera mount adapter series
Camera adapter series

INSTRUCTIONS

Camera Adapter System

Provided by Coastal Microscopes

This system employs a UIS2/UIS (Universal Infinity System) optical design, and should be used in combination with the microscope for UIS2/UIS optical design series. Less than optimum performance may result if inappropriate accessories are used. To ensure the safety, obtain optimum performance, and to familiarize yourself fully with the use of this system, we recommend that you study this manual thoroughly before operating the system. Keep this instruction manual in an easily accessible place near the work desk for future reference.

Optical Microscope Accessory

AX5896

Provided by Coastal Microscopes | coastalmicroscopes.com | sales@coastalmicroscopes.com | (877) 564-2767

Provided by Coastal Microscopes

Table of Contents

1 Camera adapter system 1

2 Range observed/acquired by the camera 3

1 Camera adapter magnification 3

2 Camera acquired magnification 4

3 Monitor observation magnification 4

3 Assembly 5

1 Mounting the camera adapter / camera mount adapter 5

2 Mounting the camera 6

4 Procedures for use 7

1 Adjusting the microscope frame 7

2 Adjusting the camera and monitor 7

3 Adjusting the parfocality between microscope and monitor images 7

4 Rotating the camera 9

5 Troubleshooting guide 10

Provided by Coastal Microscopes

Safety precautions

If the product is used in a manner not specified by this manual, the safety of the user may be imperiled. In addition, the product may also be damaged. Always use the product according to this instruction manual.

The following symbols are used in this instruction manual.

NOTE : Indicates a potentially hazardous situation which, if not avoided, may result in damage to the product or other property.

TIP : Indicates the useful knowledge or information for use.

Provided by Coastal Microscopes

1 Camera adapter system

A variety of camera adapters applicable to different types of cameras are available. A variety of cameras can be mounted on the microscope using a camera adapter (a camera mount adapter may be required for some cameras).

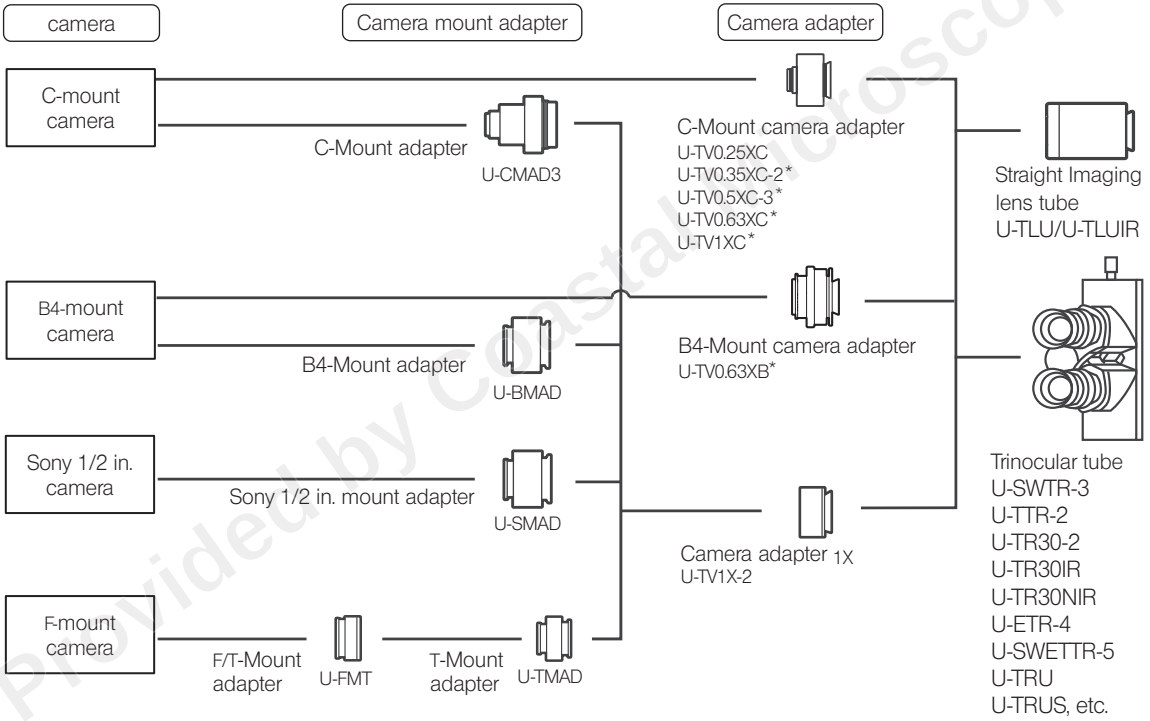

* Provided with separate instruction manual.

Provided by Coastal Microscopes

Provided by Coastal Microscopes | coastalmicroscopes.com | sales@coastalmicroscopes.com | (877) 564-2767

NOTE Restrictions on camera

- A camera cannot be used if its C-mount plane is located at a lower level than the camera body surface.
- Depending on the size of the camera, the camera may interfere with the microscope and may not be mounted.
- Depending on the combination of the magnification of the camera adapter and the camera (size of image sensor), the light in the image periphery may be insufficient or the vignetting may occur. See the next page “Range observed / acquired by the camera”.

Provided by Coastal Microscopes

Provided by Coastal Microscopes | coastalmicroscopes.com | sales@coastalmicroscopes.com | (877) 564-2767

2 Range observed/acquired by the camera

1 Camera adapter magnification

The range observed/acquired by the camera is determined by the size of the image sensor and the magnification of the camera adapter.

The range observed/acquired by the camera with respect to the range observed through the eyepieces (Field number: 22) is shown below. Select the magnification of the camera adapter referring to the picture shown below.

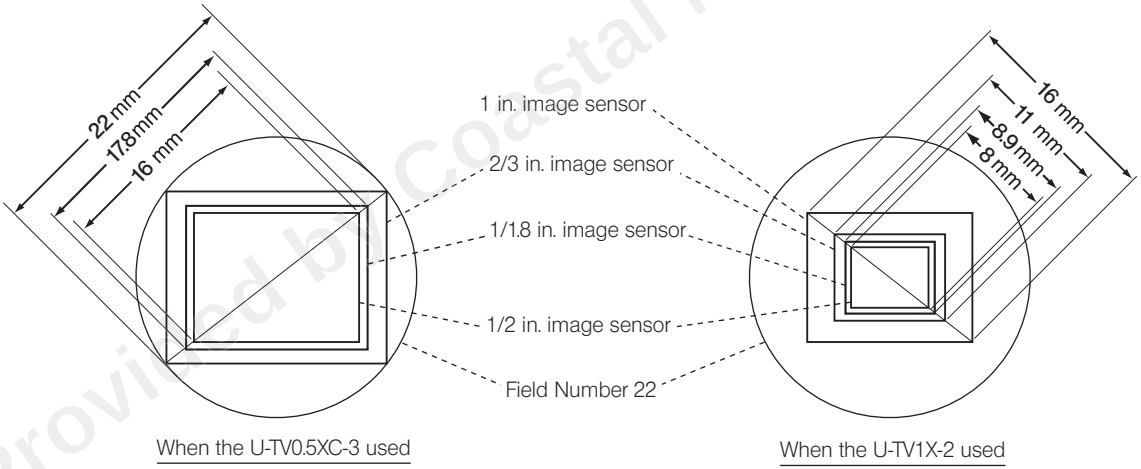

Provided by Coastal Microscopes

Provided by Coastal Microscopes | coastalmicroscopes.com | sales@coastalmicroscopes.com | (877) 564-2767

2 Camera acquired magnification

Objective magnification x Camera adapter magnification

3 Monitor observation magnification

$$\text{Camera acquired magnification (see above)} \times \frac{\text{Image diagonal length* (mm)}}{\text{Image sensor diagonal length* (mm)}}$$

* The diagonal lengths of image sensors are variable between manufacturers. Note that these are nominal values and that the above formula does not give a very accurate monitor observation magnification.

‹Diagonal length of image sensors (Typical values)›

1 in. → 16 mm, 2/3 in. → 11 mm, 1/1.8 in. → 8.9 mm, 1/2 in. → 8 mm, 1/3 in. → 6 mm, 1/4 in. → 4 mm

Provided by Coastal Microscopes

Provided by Coastal Microscopes | coastalmicroscopes.com | sales@coastalmicroscopes.com | (877) 564-2767

3 Assembly

1 Mounting the camera adapter/camera mount adapter

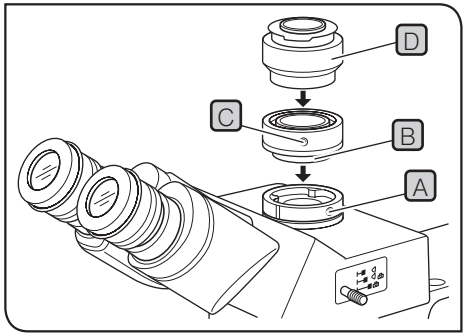

1. Using the Allen screwdriver provided with the microscope frame, loosen clamping screw A of the camera adapter mounting portion of trinocular tube (or the U-TLU).
2. Fit the round dovetail B at the bottom of the camera adapter into the camera adapter mounting portion and tighten clamping screw A.

TIP The camera mount adapter is not necessary when the C-mount camera adapter.

3. Using the Allen screwdriver, loosen the camera mount adapter clamping screw C of the camera adapter.
4. Screw the camera mount adapter D matching the camera in use into the camera adapter (by turning the adapter clockwise). Do not tighten it because this will later be adjusted.
5. Tighten clamping screw C temporarily.

Provided by Coastal Microscopes

Provided by Coastal Microscopes | coastalmicroscopes.com | sales@coastalmicroscopes.com | (877) 564-2767

2 Mounting the camera

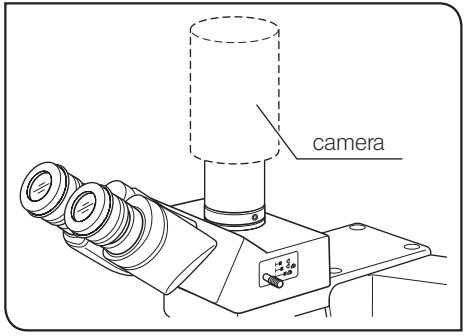

B4-mount camera, Sony 1/2 in. camera

- Align the positioning groove on the camera with the pin on the mount adapter and turn in the camera firmly.

C-mount camera

- Screw the C-mount camera into the mount adapter and secure firmly.

Provided by Coastal Microscopes

Provided by Coastal Microscopes | coastalmicroscopes.com | sales@coastalmicroscopes.com | (877) 564-2767

4 Procedures for use

TIP Refer to the operating instructions provided with the camera and the monitor.

1 Adjusting the microscope frame

Turn on the light of the microscope and make adjustments necessary to enable observation.

2 Adjusting the camera and monitor

Referring to the operating instructions for the camera and monitor, adjust the image color, etc.

TIP **The center of the field of view in the eyepieces may not perfectly coincide with the center of the image.**

3 Adjusting the parfocality between microscope and monitor images

NOTE **Be sure to adjust the eyepiece diopter in advance before making the following adjustments.**

1. Push in the light path selector of the trinocular tube to select the observation light path.
2. Using a high-power objective, look into the eyepieces and bring the specimen into accurate focus.
3. Select a low-power objective and push out the light path selector of the trinocular tube to select the camera light path.

From the next page, we will explain how to adjust the parfocality by expanding and contracting the camera adapter.

Provided by Coastal Microscopes

Provided by Coastal Microscopes | coastalmicroscopes.com | sales@coastalmicroscopes.com | (877) 564-2767

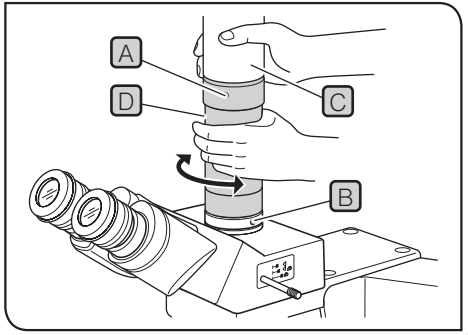

With the U-TV0.35XC-2, U-TV0.5XC-3, U-TV0.63XC, U-TV1XC or U-TV0.63XB

Refer to the operating instruction provided with the camera adapter.

With the U-TV1X-2 or U-TV0.25XC

Loosen clamping screws A and B using the Allen screwdriver. While observing the monitor image and keeping the camera mount adapter C stationary, rotate the camera adapter D until the image is in focus and then tighten screws A and B again.

TIP

The shape of the microscope frame may make it impossible to tighten clamping screw A. In this event, note the current position of the clamping screws, rotate only the camera adapter D and then tighten screw A. Then return to the original position and tighten screw B.

Provided by Coastal Microscopes

Provided by Coastal Microscopes | coastalmicroscopes.com | sales@coastalmicroscopes.com | (877) 564-2767

4 Rotating the camera

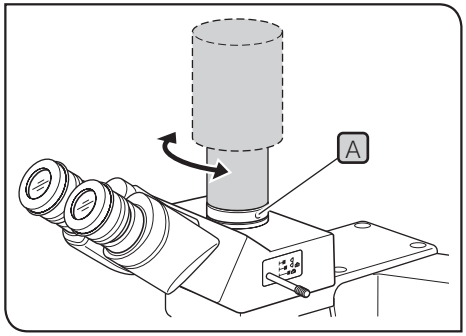

1 Loosen clamping screw A of the camera adapter mounting portion of trinocular tube, rotate the camera, and tighten screw A again.

Provided by Coastal Microscopes

Provided by Coastal Microscopes | coastalmicroscopes.com | sales@coastalmicroscopes.com | (877) 564-2767

5 Troubleshooting guide

Under certain conditions, performance of the system may be adversely affected by factors other than defects. If problems occur, please review the following list and take remedial action as needed. If you cannot solve the problem after checking the entire list, please contact Olympus for assistance.

Problem	Cause	Remedy	Page
Dust is visible. 1. Dust moves when the specimen is moved. 2. Dust moves when the camera is rotated.	1. Dust adhering to the specimen. 2. Dust adhering to the camera.	Clean.	–
The periphery of the image is dark.	The range observed/acquired by the camera is too wide.	Adjust the range observed/ acquired by the camera to the appropriate range.	3
Poor color reproduction.	White balance is not adjusted.	Adjust as required.	7
	Monitor tone is not adjusted. Adjust as required.	Adjust as required.	7
There is a large difference in focusing between the image observed by the camera and image observed visually through eyepieces.	The diopter and the parfocality are not adjusted properly.	Adjust correctly.	7, 8
The image is overexposed.	The camera sensitivity is too high or the camera does not have the auto brightness control facility.	Reduce the microscope's illumination.	–

Repair request

If you cannot solve the problems even though taking actions described in Troubleshooting, please contact Olympus for assistance.
At that time, please tell them the following information as well.

- Product name and abbreviated name (Example: C-Mount camera adapter 0.63X U-TV0.63XC)
- Product number
- Problem

Provided by Coastal Microscopes | coastalmicroscopes.com | sales@coastalmicroscopes.com | (877) 564-2767

Memo

Provided by Coastal Microscopes

Provided by Coastal Microscopes | coastalmicroscopes.com | sales@coastalmicroscopes.com | (877) 564-2767

This product is manufactured by **EVIDENT CORPORATION** effective as of Apr. 1, 2022.
Please contact our "Service Center" through the following website for any inquiries or issues related to this product.

EVIDENT CORPORATION

6666 Inatomi, Tatsuno-machi, Kamiina-gun, Nagano 399-0495, Japan

(Life science solutions)

Service Center

https://www.olympus-lifescience.com/support/service/

(Life science solutions)

Our Website

https://www.olympus-lifescience.com

(Industrial solutions)

Service Center

https://www.olympus-ims.com/service-and-support/service-centers/

(Industrial solutions)

Our Website

https://www.olympus-ims.com

AX5896 09 Issued in March, 2022

Provided by Coastal Microscopes
Provided by Coastal Microscopes | coastalmicroscopes.com | sales@coastalmicroscopes.com | (877) 564-2767